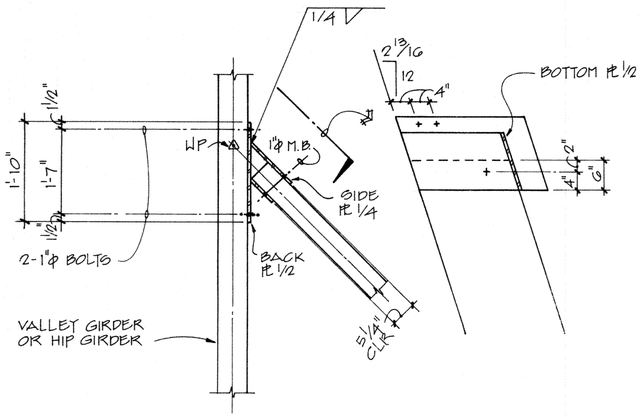

1 SECTION
3/4" = 1'-0"

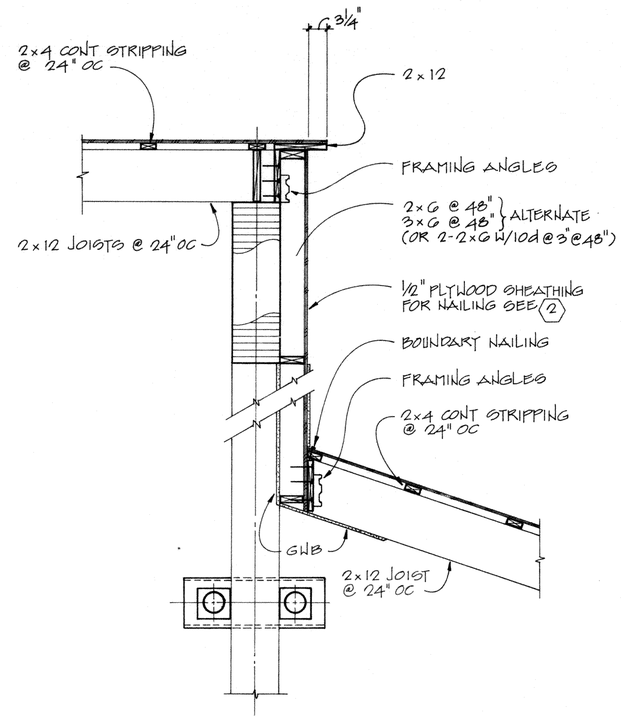

3 SECTION
3/4" = 1'-0"

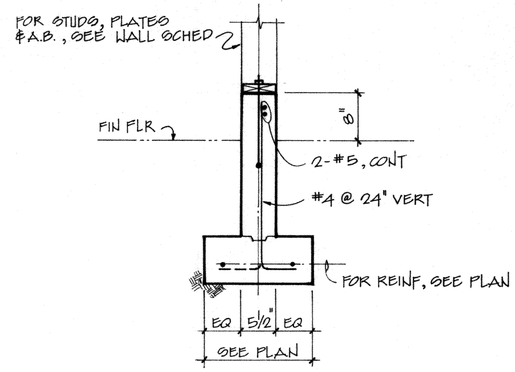

10 SECTION
1" = 1'-0"

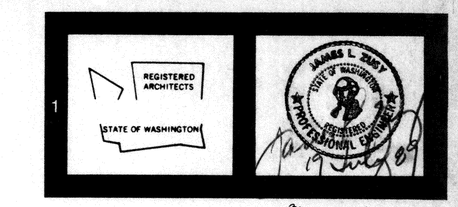

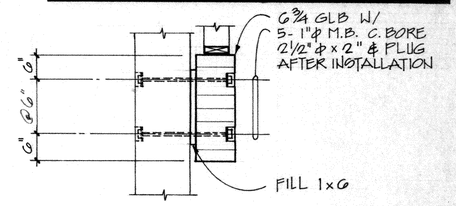

11 SECTION
NTS

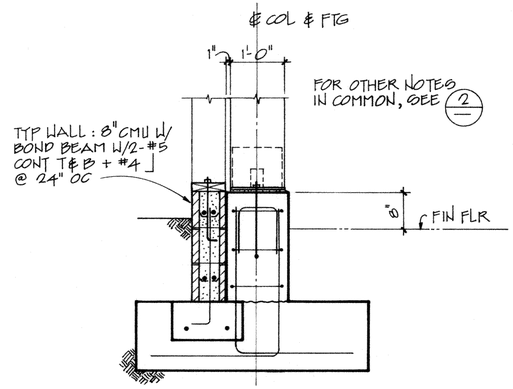

9 SECTION
3/4" = 1'-0"

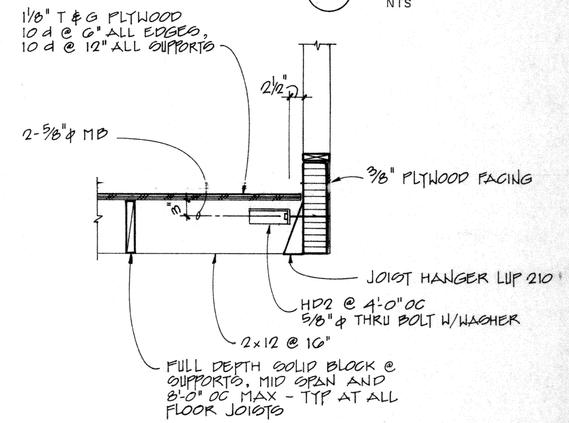

7 SECTION
3/4" = 1'-0"

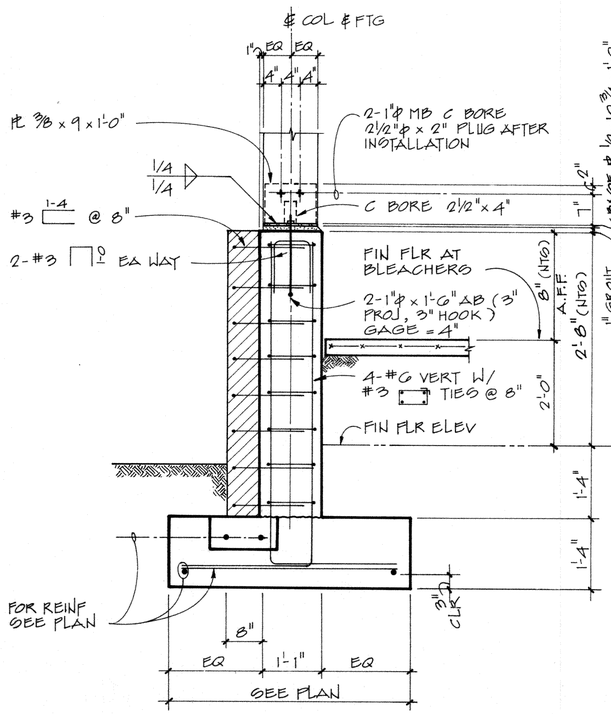

2 SECTION
NTS

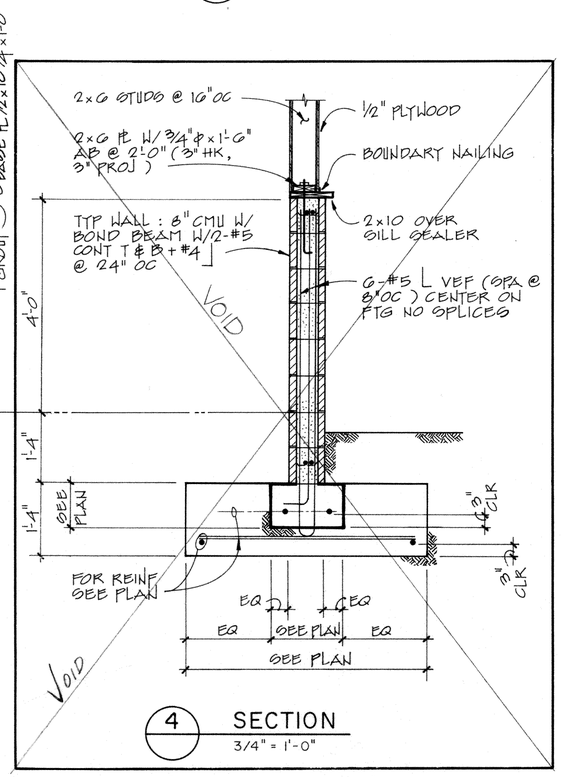

4 SECTION
3/4" = 1'-0"

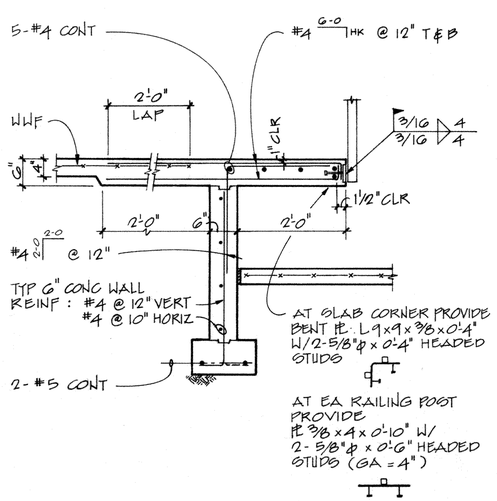

6 SECTION
3/4" = 1'-0"

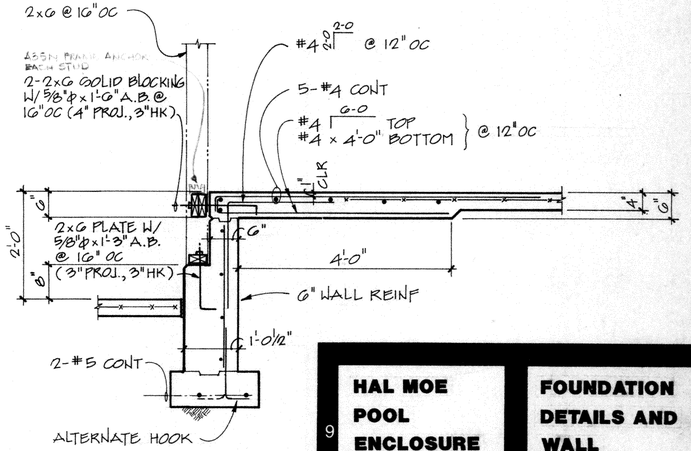

8 SECTION
3/4" = 1'-0"

HAL MOE POOL ENCLOSURE	FOUNDATION DETAILS AND WALL SECTIONS

THE TSANG PARTNERSHIP, INC.
☐ SEATTLE ☐ TACOMA
1221 SECOND AVENUE SUITE 330 SEATTLE, WA 98101 (206) 343-3044 FAX (206) 664-9598
748 MARKET STREET SUITE 300 TACOMA, WA 98402 (206) 272-6383 FAX (206) 383-9059

DATE: 8-8-89
REVISED:
SHEET NO.: S4

© COPYRIGHTS RESERVED