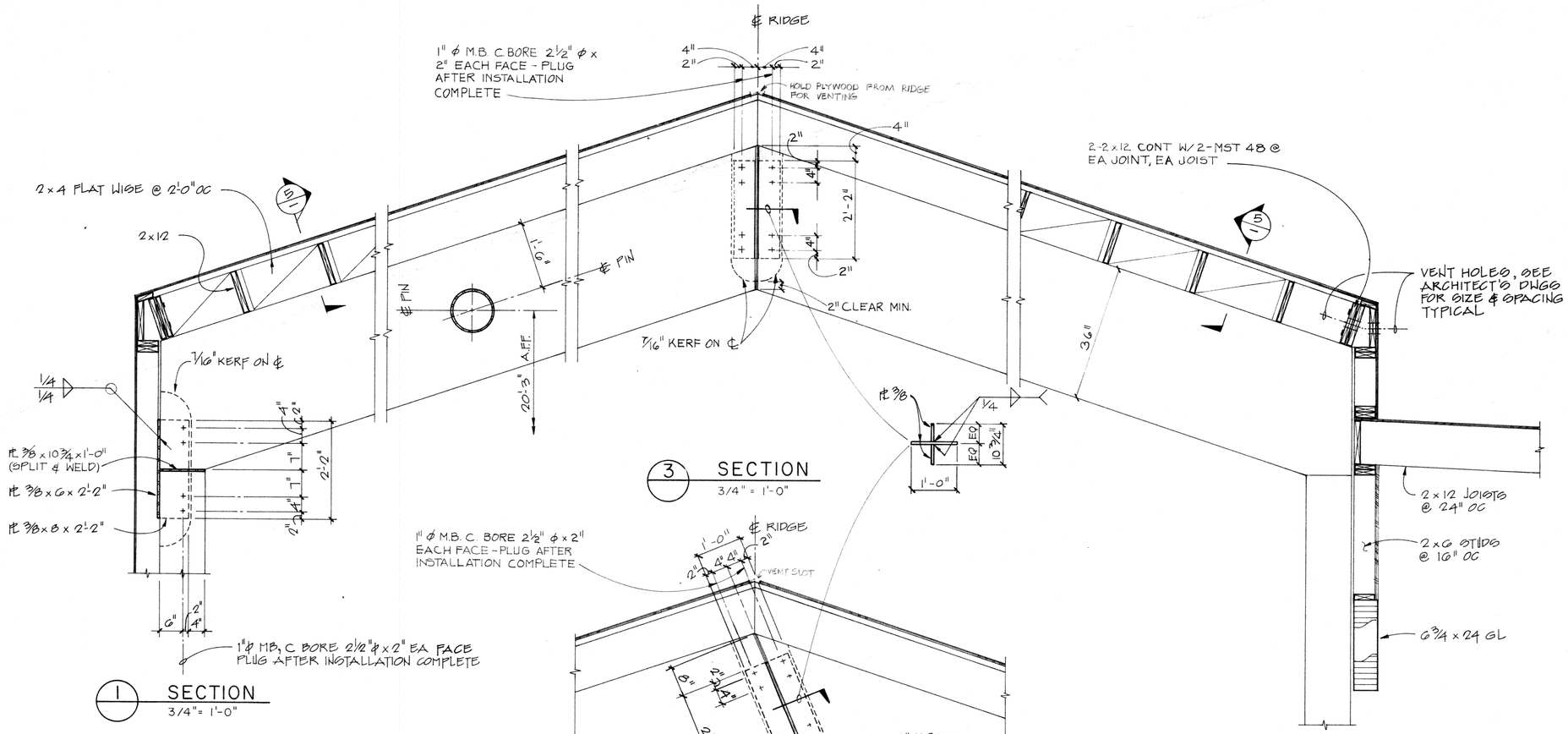

1 SECTION 3/4" = 1'-0"

2 DETAIL - PIN 1½" = 1'-0"

3 SECTION 3/4" = 1'-0"

4 SECTION 3/4" = 1'-0"

5 SECTION 3/4" = 1'-0"

6 SECTION 3/4" = 1'-0"

7 SECTION 1½" = 1'-0"

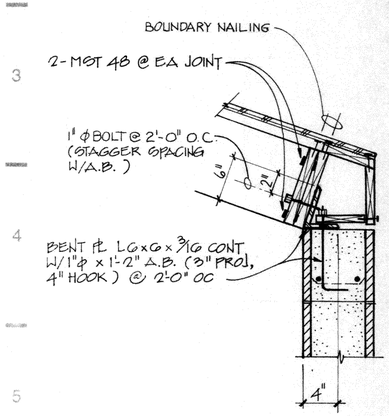

8 SECTION 1½" = 1'-0"

REGISTERED ARCHITECTS
STATE OF WASHINGTON

HAL MOE POOL ENCLOSURE

ROOF FRAMING DETAILS

THE TSANG PARTNERSHIP, INC.
☐ SEATTLE: 1221 SECOND AVENUE, SUITE 330, SEATTLE, WA 98101, (206) 343-3044, FAX (206) 664-9598
☐ TACOMA: 748 MARKET STREET, SUITE 300, TACOMA, WA 98402, (206) 272-9383, FAX (206) 383-8056

DATE: 8-8-89

REVISED:

SHEET NO.: S5

© COPYRIGHTS RESERVED