Geotechnical Engineering Services

30th Street SE Widening Project
Snohomish , Washington

for
AECOM

December 23, 2014

GeoEngineers
Earth Science + Technology

Geotechnical Engineering Services

30th Street SE Widening Project
Snohomish , Washington

for
AECOM

December 23, 2014

GeoEngineers

8410 154th Avenue NE
Redmond, Washington 98052
425.861.6000

Geotechnical Engineering Services

30th Street SE Widening Project
Snohomish, Washington

File No. 0820-009-00

December 23, 2014

Prepared for:

AECOM
710 2nd Avenue, Suite 1000
Seattle, Washington 98104

Attention: Erick Crowe

Prepared by:

GeoEngineers, Inc.
8410 154th Avenue NE
Redmond, Washington 98052
425.861.6000

for Carla E. Walton
Geotechnical Engineer

Robert C. Metcalfe, PE, LEG
Associate

ROBERT C. METCALFE
STATE OF WASHINGTON
32807
REGISTERED
PROFESSIONAL ENGINEER

12/23/14

CEW:RCM:nld

Disclaimer: Any electronic form, facsimile or hard copy of the original document (email, text, table, and/or figure), if provided, and any attachments are only a copy of the original document. The original document is stored by GeoEngineers, Inc. and will serve as the official document of record.

Copyright© 2014 by GeoEngineers, Inc. All rights reserved.

GeoEngineers

Table of Contents

INTRODUCTION AND PROJECT UNDERSTANDING **1**

PURPOSE AND SCOPE **1**

FIELD EXPLORATIONS AND LABORATORY TESTING **1**

Field Explorations 1
Laboratory Testing 1

SITE CONDITIONS **2**

Geology 2
Surface Conditions 2
Pavement Conditions 2
Hand Auger Exploration 3
Groundwater Conditions 3

CONCLUSIONS AND RECOMMENDATIONS **3**

Site Preparation and Earthwork 3
General 3
Clearing, Grubbing and Stripping 4
Subgrade Preparation 4
Structural Fill 5
Utility Trenches 7
Temporary Cut Slopes 7
Permanent Cut Slopes 8
Drainage and Erosion Control 8
Infiltration Considerations 9
Pavement Recommendations 9
Pavement Repair 9
Traffic Design Information 9
New Pavement Design Criteria 9
Pavement Overlay Design 10
Recommended Additional Geotechnical Services 11

LIMITATIONS **11**

REFERENCES **11**

Table of Contents (continued)

LIST OF FIGURES

Figure 1. Vicinity Map
Figures 2 and 3. Site Plan

APPENDICES

Appendix A. Field Explorations
- Figure A-1 – Key to Exploration Logs
- Figures A-2 and A-3 – Log of Pavement Cores
- Figure A-4– Log of Hand Auger

Appendix B. Laboratory Testing
- Figures B-1– Sieve Analysis Results

Appendix C. Supporting Pavement Design Calculations
Appendix D. Report Limitations and Guidelines for Use

INTRODUCTION AND PROJECT UNDERSTANDING

This report contains the results of our geotechnical engineering services for the proposed 30th Street SE Widening project in Snohomish, Washington. The site is shown relative to surrounding physical features on the Vicinity Map (Figure 1) and the Site Plans (Figures 2 and 3).

We understand that 30th Street SE will be widened approximately 390 feet east and 760 feet west of the intersection with Highway SR9. The proposed improved roadway will include a new 13-foot-wide right turning lane east of Highway SR9 and a new 11-foot-wide through lane west of Highway SR9. The new pavement section will extent north of the existing paved roadway. Areas of the existing pavement will also be overlaid to facilitate the new roadway grades. The proposed roadway improvements will be about 1150 feet long and will include adjacent gutter and sidewalks. We anticipate minor utility improvements associated with the project.

The new roadway improvements will be owned and maintained by the City of Snohomish. The roadway segments from about Stations 10+00 to 15+85 and between Station 18+00 and Station 21+50 will be relatively close to existing grades. A proposed 2H:1V (horizontal:vertical) cut through an existing hillslope on the north side of 30th Street SE will be made between about Station 15+85 and Station 17+00.

PURPOSE AND SCOPE

The purposes of our services are to: (1) explore subsurface soil and groundwater conditions along the project alignment as a basis for developing geotechnical recommendations and design criteria for the proposed roadway improvements, and (2) provide consultation on geotechnical issues to project team members during final design.

Our geotechnical engineering services were completed in accordance with our services agreement dated February 25, 2014 and a purchase order for Project No. 60322331.

FIELD EXPLORATIONS AND LABORATORY TESTING

Field Explorations

We evaluated subsurface conditions for the proposed improvements by completing two pavement core explorations (PC-1 and PC-2) within the existing paved segment of 30th Street SE, and one hand auger exploration (HA-1) north of the 30th Street SE. The approximate locations of our explorations are shown on the Site Plan, Figures 2 and 3. A detailed description of the field exploration program is presented in Appendix A.

Laboratory Testing

Soil samples were collected from the explorations, transported to our geotechnical laboratory, and evaluated to confirm or modify field classifications. Representative samples were selected for laboratory testing consisting of moisture content and grain size distribution (sieve analyses) tests. A description of the laboratory testing and the test results are presented in Appendix B.

SITE CONDITIONS

Geology

Published geologic information for the project vicinity includes a U.S. Geological Survey Map titled "Geologic Map of Snohomish quadrangle, Snohomish County, Washington (James P. Minard, 1985). Mapped soils in the project vicinity consist of glacial till deposits (Fraser Glaciation).

Glacial till typically consists of a heterogeneous mixture of sand, gravel, cobbles and occasional boulders in a silt and clay matrix that was deposited beneath a glacier. Because glacial till has been overridden by thousands of feet of ice, it is typically dense to very dense. Glacial till in the Snohomish area typically mantles hills, ridges, and slopes and varies in thickness from about 10 to 60 feet.

Surface Conditions

The planned roadway improvements are located east and west of the intersection of 30th Street SE and Highway SR9. The segment located east of Highway SR9 (Station 17+60 to 21+50) is bounded to the north by an existing one level commercial property (Snohomish property tax parcel number 28050100100500), to the south by a gas station (Snohomish tax parcel number 28050100107100), to the east by residential properties, and to the west by Highway SR9. The roadway grade in this segment slopes down to the east with an overall grade change of about 8 feet from (Elevation 263 to 271 feet).

The segment located west of Highway SR9 (Station 10+00 to 17+60) is bounded to the north by residential properties, to the south by residential properties, to the east by Highway SR9, and to the west by 95th Drive SE. 96th Drive SE also bisects 30th Street SE at about Station 14+25. This segment generally slopes down from west to east with an overall grade change of about 27 feet (Elevation 298 feet to 271 feet) and a maximum grade of 9.57 percent.

Vegetation in the surrounding areas consists of deciduous trees, brush, grasses, and some landscaped areas.

Pavement Conditions

We evaluated the existing pavement surface conditions by visual observation and we measured the pavement section by coring 8-inch-diameter pavement cores at two locations (PC-1 and PC-2), as shown on the Site Plans (Figures 2, and 3).

We completed a visual condition survey of the existing roadway in general accordance with the procedure outlined in Appendix K of the 1993 AASHTO Guide for Design of Pavement Structures. Low to medium severity parallel and transverse fatigue cracking, and low severity alligator (fatigue) cracking were observed along the roadway east and west of SR9. Significant pot holes and settlement of utility trench backfill were not observed.

Observed pavement sections at the two core locations are summarized in Table 1.

TABLE 1. SUMMARY OF EXISTING PAVEMENT SECTION

Exploration	Approximate Station	Asphalt Thickness (inches)	Base Course Thickness (inches)
PC-1	15+40	8 inches	4
PC-2	19+00	9 inches	>9

Pavement core PC-1 was completed approximately 170 feet west of the intersection of 30th Street SE and Highway SR9, at approximately Station 15+40. Subgrade soil beneath the pavement consisted of a very dense sand with gravel and variable silt content to depth explored (1½ feet).

Pavement core PC-2 was completed approximately 100 feet east of the intersection of 30th Street SE and Highway SR9, at approximately Station 19+00. Subgrade soils beneath the pavement consisted of medium to very dense gravel with sand and silt.

Hand Auger Exploration

One hand auger exploration (HA-1) was completed north of the existing roadway in the area where the 2H:1V cut slope is planned. The approximate location of the hand auger is shown on the Site Plan (Figure 3). Materials encountered in Hand Auger HA-1 were loose to dense sand with silt, gravel and occasional organics (fine roots) to a depth of 1½ feet below the existing ground surface. This material appears to be glacial till and denser till soils should exist at depth.

Groundwater Conditions

Groundwater was not observed in any of the explorations completed for this project. However, groundwater level is expected to vary with season and precipitation, and perched groundwater should be anticipated at the contract between looser overlying soils and dense underlying native till.

CONCLUSIONS AND RECOMMENDATIONS

Based on the results of our explorations, laboratory testing, analyses and our experience at this and nearby sites, we conclude that the proposed roadway project may be satisfactorily constructed as planned with respect to geotechnical elements.

Site Preparation and Earthwork

General

Based on the subsurface conditions encountered in the explorations, we anticipate the soils at the site may be excavated using conventional heavy duty construction equipment. Site soils generally consist of loose to dense fill, and dense to very dense glacial till soils, which commonly contain cobbles and boulders that may be encountered during excavation. Accordingly, the contractor should be prepared to address cobbles and boulders, if encountered.

The on-site fill and native soils contain a significant percentage of fines (particles passing the U.S. Standard No. 200 sieve) and are highly moisture-sensitive and susceptible to disturbance, especially when wet. Ideally, site preparation and earthwork should be undertaken during extended periods of dry weather (June through September) when the surficial soils will be less susceptible to disturbance and provide better

support for construction equipment. Also, groundwater seepage quantities in excavations will likely be lower and therefore easier to handle. Dry weather construction will help reduce earthwork costs and increase the potential for reusing the existing fill and native soils as structural fill.

Clearing, Grubbing and Stripping

Construction of the new roadway improvements will require clearing, grubbing and stripping. Trees, brush, vegetation and debris should be cut down and removed from planned roadway cut and fill areas. In addition, stumps and roots larger than 1 inch in diameter should be grubbed. We also recommend that hazardous trees (trees which lean toward the roadway corridor) also be cut down or trimmed to reduce the risk of tree fall onto the roadway. Cut vegetation can also be chipped and used as mulch for landscaping or erosion control in other parts of the alignment.

Graded areas should be stripped of topsoil and other surficial organic soils. Based on the explorations, we estimate the depth of stripping will be on the order of 6 inches, unless excessive disturbance is caused by clearing and grubbing operations. Deeper stripping may be needed where deeper/larger tree root zones exist. Disturbance to a greater depth can also be expected if these activities take place during wet weather.

The organic soils can be stockpiled and used later for landscaping purposes or may be spread over disturbed areas following completion of grading. If spread out, the organic strippings should be in a layer less than 1 foot in thickness, should not be placed on slopes greater than 3H:1V, and should be tracked to a uniformly compacted condition. Materials that cannot be used for landscaping or protection of disturbed areas should be removed from the project site.

We understand that some areas of existing pavement and sidewalk (east of highway SR9) will be removed. Existing asphalt may be recycled for use in the lower portion of structural fills provided that it is crushed to meet the gradation requirements for structural fill, as discussed below. Also, the existing asphalt concrete could be pulverized and recycled as aggregate for new pavement.

Subgrade Preparation

Prior to placing new fills or pavement section materials, roadway and sidewalk subgrade areas should be evaluated by proof rolling or probing to locate zones of soft or pumping soils. Proof rolling can be completed using a piece of heavy tire-mounted equipment such as a loaded dump truck. During wet weather or if significant seepage occurs within parts of the alignment, the exposed subgrade areas should be probed to determine the extent of soft soils. If soft or pumping soils are observed, they should be removed and replaced with structural fill.

Once approved, the subgrade areas should be recompacted to a firm and unyielding condition, if possible. The achievable degree of compaction will depend on when construction is performed. If the work is performed during dry weather conditions, we recommend that all subgrade areas be recompacted to at least 95 percent of the maximum dry density (MDD) using the American Society for Testing and Materials (ASTM) D 1557 test procedure (modified Proctor). If the work is performed during wet weather conditions or within wet areas caused by seepage, it may not be possible to recompact the subgrade to 95 percent of the MDD. In this case, we recommend that the subgrade be compacted to the extent possible without causing undue weaving or pumping of the subgrade soils.

Subgrade disturbance or deterioration could occur if the subgrade is wet and cannot be dried, such as in seepage areas. If the subgrade deteriorates during compaction, it may become necessary to modify the compaction criteria or methods.

Structural Fill

Subgrade Preparation

Roadway segments that will receive fill should be prepared in the manner described in the Subgrade Preparation section of this report. Fill placed on existing slopes, which are steeper than 5H:1V should be properly benched and keyed into the native soil slope surface. This can be done by constructing the fill in a series of 6- to 8-foot-wide benches cut into the slope. The benches should be constructed in accordance with Section 2-03.3(14) of the 2014 Washington State Department of Transportation (WSDOT) Standard Specifications, and should be compacted to a firm, non-yielding condition prior to placing new embankment fill soils.

Materials

All fill, whether on-site soils or imported fill supporting the roadway pavement, sidewalks and related structures, or in utility trenches, should meet the criteria for structural fill presented below. Structural fill should be free of debris and organic and man-made contaminants, and should be restricted to particle sizes no larger than 4 inches in diameter. The suitability of soil for use as structural fill depends on its gradation and moisture content.

Recommended structural fill material type varies depending upon its use as described below:

- Structural fill placed as subbase in roadway and sidewalk areas and to backfill utility trenches should consist of Gravel Borrow as described in Section 9-03.14(1) of the 2014 WSDOT Standard Specifications, with the additional restriction that the fines content be limited to no more than 5 percent, especially if the work occurs in wet weather or during the wet season (October through May). However, if earthwork occurs during the normally dry months (June through September) on site fill and outwash soils that are properly moisture conditioned and that can be properly compacted may be used as structural fill in these areas.
- Structural fill placed as crushed surfacing base course below pavements should conform to Section 9-03.9 (3) of the 2014 WSDOT Standard Specifications.
- Utility pipe bedding should conform to Section 9-03.12(3) of the 2014 WSDOT Standard Specifications, unless required otherwise by the City of Snohomish or the civil engineer.
- If used on site, controlled density fill (CDF) should be in accordance with 2014 WSDOT Standard Specification 2-09.3(1) E.

Reuse of On-site Soils

Based on our explorations, most of the on-site fill and native soils consist of sand with varying amounts of silt and gravel. On-site fill and native till soils are expected to be suitable for use as structural fill, provided the work is completed during the normally dry season (June through September) and that the soil can be properly moisture conditioned. On site soil with significant debris or organic matter should not be used as structural fill. It may be necessary to import gravel borrow to achieve adequate compaction during wet weather construction.

The contractor should plan to cover and maintain all fill stockpiles with plastic sheeting if they will be used as structural fill. The reuse of on-site soils is highly dependent on the skill of the contractor and schedule, and we will work with the design team and contractor to maximize the reuse of on-site soils during the wet and dry seasons.

Reuse of Existing Asphalt and Concrete Rubble

Existing asphalt pavement and portland cement concrete (PCC) rubble may be reused as structural fill if properly crushed during demolition. Recycled concrete or asphalt pavement should not be used as structural fill in landscape areas. For use as structural fill, the asphalt and concrete rubble should be crushed or otherwise ground up and should meet the gradation requirements as described in Section 9-03.14(1) of the 2012 WSDOT Standard Specifications. If recycled asphalt and/or concrete will be used under pavement areas, we recommend that it meet the gradation requirements for crushed surfacing base course as described in Section 9-03.9(3) of the 2012 WSDOT Standard Specifications.

Fill Placement and Compaction Criteria

Structural fill should be mechanically compacted to a firm, non-yielding condition. Structural fill should be placed in loose lifts not exceeding 12 inches in thickness if using heavy compactors and 6 inches or less if using hand operated compaction equipment. The actual lift thickness will be dependent on the structural fill material used and the type and size of compaction equipment. Each lift should be conditioned to the proper moisture content and compacted to the specified density before placing subsequent lifts. Structural fill should be compacted to the following criteria:

- All fill placed under the new pavement sections including utility trench backfill, should be placed as structural fill compacted to at least 95 percent of the MDD obtained using ASTM D 1557.
- Structural fill in new sidewalk areas, including utility trench backfill, should be compacted to at least 90 percent of the MDD, except that the upper 3 feet of fill below final subgrade should be compacted to at least 95 percent of the MDD.
- Structural fill placed as subbase course and crushed surfacing base course below pavements should be compacted to 95 percent of the MDD.
- Non-structural fill, such as fill placed in landscaped areas, should be compacted to at least 90 percent of the MDD.

Weather Considerations

Disturbance of near surface soils should be expected, especially if earthwork is completed during periods of wet weather. During dry weather the soils will: (1) be less susceptible to disturbance, (2) provide better support for construction equipment, and (3) be more likely to meet the required compaction criteria.

The wet weather season generally begins in October and continues through May in Washington; however, periods of wet weather may occur during any month of the year. For earthwork activities during wet weather, we recommend that the following steps be taken:

- The ground surface in and around the work area should be sloped so that surface water is directed away from the work area. The ground surface should be graded so that areas of ponded water do not develop. Measures should be taken by the contractor to prevent surface water from collecting in excavations and trenches. Measures should be implemented to remove surface water from the work area. Surface water must not be directed towards slopes and we recommend that stormwater drainage

ditches be constructed where needed along the crest of slopes to prevent uncontrolled surface water runoff.

- Earthwork activities should not take place during periods of moderate to heavy precipitation.
- Slopes with exposed soils should be covered with plastic sheeting.
- The contractor should take necessary measures to prevent on-site soils and soils to be used as fill from becoming wet or unstable. These measures may include the use of plastic sheeting, sumps with pumps, and grading. The site soils should not be left uncompacted and exposed to moisture. Sealing the surficial soils by rolling with a smooth-drum roller prior to periods of precipitation will help reduce the extent that these soils become wet or unstable.
- The contractor should cover all soil stockpiles that will be used as structural fill with plastic sheeting.

Utility Trenches

Trench excavation, pipe bedding, and trench backfilling should be completed using the general procedures described in the 2014 WSDOT Standard Specifications or other suitable procedures specified by the City of Snohomish Design and Construction Standards and the project civil engineer. Utility trench backfill should consist of structural fill and should be placed in uniform lifts such that adequate compaction can be achieved throughout the lift. Each lift must be compacted prior to placing the subsequent lift. Prior to compaction, the backfill should be moisture conditioned to within 2 percent of the optimum moisture content, if necessary.

Where utilities are bedded and backfilled with free-draining gravel and other granular fill, and where the utility trench slopes more than 5 percent in the longitudinal roadway direction, we recommend that backfill seepage barriers be constructed at appropriate intervals to prevent movement of groundwater through the bedding or backfill zone and causing high hydrostatic pressures downslope. These barriers should consist of low permeability soils such as silt or clay, or CDF, and should be at least 2 feet long in the longitudinal direction. The barriers should extend from the base of the trench, surround the utility pipe, and extend up to the surface of the roadway subbase fill. Seepage barriers are typically spaced 100 feet apart for grades of 20 percent or less.

Temporary Cut Slopes

The stability of open cut slopes is a function of soil type, groundwater seepage, slope inclination, slope height and nearby surface loads. The use of inadequately designed open cuts could impact the stability of adjacent work areas, existing utilities, and endanger personnel. The contractor performing the work has the primary responsibility for protection of workmen and adjacent improvements.

In our opinion, the contractor will be in the best position to observe subsurface conditions continuously throughout the construction process and to respond to variable soil and groundwater conditions. Therefore, the contractor should have the primary responsibility for deciding whether or not to use open cut slopes for much of the excavations rather than some form of temporary excavation support, and for establishing the safe inclination of the cut slope. Acceptable slope inclinations for utilities and ancillary excavations should be determined during construction. Temporary cut slopes must comply with the provisions of Title 296 WAC, Part N, “Excavation, and Trenching.”

For planning purposes, temporary unsupported cut slopes more than 4 feet high may be inclined at 1½H:1V maximum steepness within the existing fill and ablation till deposits. Cut slopes can be steepened to 1H:1V within the dense to very dense native glacial till if groundwater seepage is not present and as approved by the geotechnical engineer. We recommend that a representative from our firm observe the cuts to assess stability prior to making final temporary cuts.

The above guidelines assume that surface loads such as equipment loads and storage loads will be kept a sufficient distance away from the top of the cut so that the stability of the excavation is not affected. We recommend that this distance be not less than half the height of the cut.

Some sloughing and raveling of the cut slopes should be expected. Temporary covering, such as heavy plastic sheeting with appropriate ballast, should be used to protect these slopes during periods of wet weather. Surface water runoff from above cut slopes should be prevented from flowing over the slope face by using berms, drainage ditches, swales or other appropriate methods.

If temporary cut slopes experience excessive sloughing or raveling during construction, it may become necessary to modify the cut slopes to maintain safe working conditions. Slopes experiencing problems can be flattened, regraded to add intermediate slope benches, or additional dewatering can be provided if the poor slope performance is related to groundwater seepage.

Permanent Cut Slopes

The excavation for the cut slope on the north side of 30th Street SE from about Station 15+80 to the intersection with Highway SR9 (Station 17+00) will likely encounter glacial till soils. We recommend that permanent cut slopes be constructed at inclinations of 2H:1V or flatter in native till soils, and be blended into existing slopes with smooth transitions.

To reduce the risk of erosion, newly constructed slopes should be planted or hydroseeded shortly after completion of grading. Until the vegetation is established, some sloughing and raveling of the slopes should be expected. This may necessitate localized repairs and reseeding. Temporary covering, such as clear heavy plastic sheeting, jute fabric, loose straw, or rolled erosion control products such as North American Green SC150 or American Excelsior Curlex I may be used to protect the slopes during periods of rainfall where vegetation is established.

Drainage and Erosion Control

In our opinion, the erosion potential of the on-site soils along the existing paved segment of 30th Street SE is low to moderate. Construction activities including stripping and grading will expose soils to the erosion effects of wind and water. The amount and potential impacts of erosion are partly related to the time of year that construction actually occurs. Wet weather construction will increase the amount and extent of erosion and potential sedimentation.

The timely and effective implementation of temporary drainage and erosion control measures is a key element of the project schedule and cost. The control of surface and subsurface drainage during construction together with maintenance of erosion control features are integral to a successful erosion control program. Erosion control measures have the objectives of preventing erosion, intercepting eroded soil and restoring eroded areas.

Erosion and sedimentation control measures should be installed and maintained in accordance with the requirements of the City of Snohomish.

We recommend that permanent drainage ditches be constructed along the toe of roadway cuts. In addition, the ground surface should be sloped away from the top of cut slopes to prevent surface water from flowing down the slope face.

Infiltration Considerations

Sieve analyses were performed on selected soil samples collected from the explorations that were completed as part of this study. The soil samples typically consisted of fill and native glacial till, and the geologic map indicates that dense glacial till soils exist throughout the project area. The preliminary design infiltration values described below are based on the results of the grain size analyses, the United States Department of Agriculture (USDA) Textural Triangle, and the Washington State Department of Ecology Storm Water Management Manual (2005). The majority of the soils across the site contain significant fines, which limits the infiltration capacity. We anticipate that the fines content (material passing the U.S. No. 200 sieve) will range from 25 to 50 percent in most native till soils. Based on our assessment, we anticipate that a maximum design infiltration rate of 0.20 inches per hour may be used for design of shallow infiltration facilities. A site specific pilot infiltration test (PIT) may be required by the City for final design or if a potential higher infiltration rate is desired.

Pavement Recommendations

Pavement Repair

Low severity cracking was observed in isolated areas of the existing pavement. The cracks should be cleaned and sealed prior to overlaying the existing pavement with new asphalt. We did not observe areas of the pavement that would require significant repair prior to overlaying with asphalt. Pavement repair should be completed in accordance with the City of Snohomish Engineering Design and Construction Standards Manual

Traffic Design Information

Table 2 summarizes the traffic information used to complete pavement design for this project. This information was provided by AECOM.

TABLE 2. TRAFFIC DATA

Average Daily Traffic in Design Lane (ADT)	Percent Growth (%)	Percent Cars (%)	Percent Trucks (%)	Design Lane 18-Kip Equivalent Single Axle Loads (ESALs)
5,008	2	98	2	553,838

New Pavement Design Criteria

Pavement design was completed using the traffic information listed in Table 2 and the design methods of the 1993 AASHTO Guide for Design of Pavement Structures. The pavement design was completed using the assumptions provided in Table 3. Supporting calculations are provided in Appendix C.

TABLE 3. DESIGN ASSUMPTIONS

Overall Standard Deviation, So	Reliability Level, R (%)	Original Serviceability Index, Po	Terminal Serviceability Index, Pt	CBR of Subgrade soils	Design Life (years)
0.5	85	4.2	2.5	15	20

The City of Snohomish Department of Public Works classifies 30th Street SE as a Collector. The City provides a typical roadway section for Arterials as Standard Plan No. 301. Based on the pavement design calculations we recommend that the pavement sections provided in Standard Plan No. 301 be used for design of new pavement sections. Placement and compaction of the asphalt should be completed in accordance with the City's design standards.

Using the classifications and the methodology presented above, we recommend that the flexible HMA pavement sections presented in Table 4 be used for the project. These recommendations meet the minimum City of Snohomish Engineering Design and Construction Standards requirements.

TABLE 4. NEW HOT MIX ASPHALT PAVEMENTS

Pavement Option	Material	New Pavement Section Thickness (in)	
		Standard Roadway Section	Alternate Roadway Section
New Pavement Section[1]	HMA Class B	4	3
	ATB	N/A	4
	CSTC	6	6
	Gravel Borrow	5	N/A

Notes:

[1] Asphalt concrete pavement should meet the requirements of the City of Snohomish's Engineering Design and Construction Standards Manual.

Pavement Overlay Design

The City requires pavement overlays have a minimum thickness of 2 inches. Based on our calculations a minimum 2-inch-thick overlay will provide equivalent structural capacity as the new pavement sections if the existing pavement is not milled (See Appendix C). Milling is often completed as part of pavement overlays to improve surface smoothness, especially if rutting of the existing pavement is present. We did not observe significant rutting of the existing pavement, and in our opinion milling prior to overlay is not required. If surface smoothness is a significant concern, we recommend that up to 2 inches of the existing pavement be milled prior to overlaying new asphalt. If 2 inches of the existing pavement is milled, the minimum overlay thickness should be increased to 3 inches to achieve the same structural capacity as the new pavement section. The existing surface should be prepared prior to overlay including cleaning and sealing of existing cracks as described above. The overlay section was calculated based on the City of Snohomish's minimum pavement section's calculated structural number in accordance with the 1993 AASHTO Guide for Design of Pavement Structures. Calculations supporting the overlay thickness are presented in Appendix C.

Recommended Additional Geotechnical Services

Throughout this report, recommendations are provided where we consider additional geotechnical services to be appropriate. These additional services are summarized below:

- GeoEngineers should be retained to review the project plans and specifications when complete to confirm that our design recommendations have been implemented as intended.
- During construction, GeoEngineers should observe and evaluate the suitability of the temporary and permanent drainage and erosion control measures, observe removal of unsuitable soils, evaluate temporary and permanent cut and fill slope conditions, observe installation of subsurface drainage measures (if needed), evaluate the suitability of pavement subgrades and other appurtenant structures, observe and test structural backfill, and provide a summary letter of our construction observation services. The purposes of GeoEngineers construction phase services are to confirm that the subsurface conditions are consistent with those observed in the explorations, to provide recommendations for design changes should the conditions revealed during the work differ from those anticipated, and to evaluate whether or not earthwork and pavement construction activities are completed in accordance with our recommendations.

LIMITATIONS

We have prepared this report for the exclusive use by AECOM, the City of Snohomish, and their authorized agents for the design of the proposed improvements to the 30th Street SE Widening project in Snohomish, Washington.

Within the limitations of scope, schedule and budget, our services have been executed in accordance with generally accepted practices in the field of geotechnical engineering in this area at the time this report was prepared. No warranty or other conditions, express or implied, should be understood.

Any electronic form, facsimile or hard copy of the original document (email, text, table and/or figure), if provided, and any attachments are only a copy of the original document. The original document is stored by GeoEngineers, Inc. and will serve as the official document of record.

Please refer to Appendix D titled, "Report Limitations and Guidelines for Use" for additional information pertaining to use of this report.

REFERENCES

James P. Minard (1985). "Geologic Map of the Snohomish Quadrangle, Snohomish County, Washington." U.S Geological Survey, Open-File Report M(200) MF-1745 C2, scale 1:24,000.

Snohomish County Engineering Design and Construction Standards.

Washington State Department of Transportation, Geotechnical Design Manual, 2014.

Washington State Department of Transportation, 2014. Standard Specifications for Road, Bridge and Municipal Construction.

FIGURES

GeoEngineers

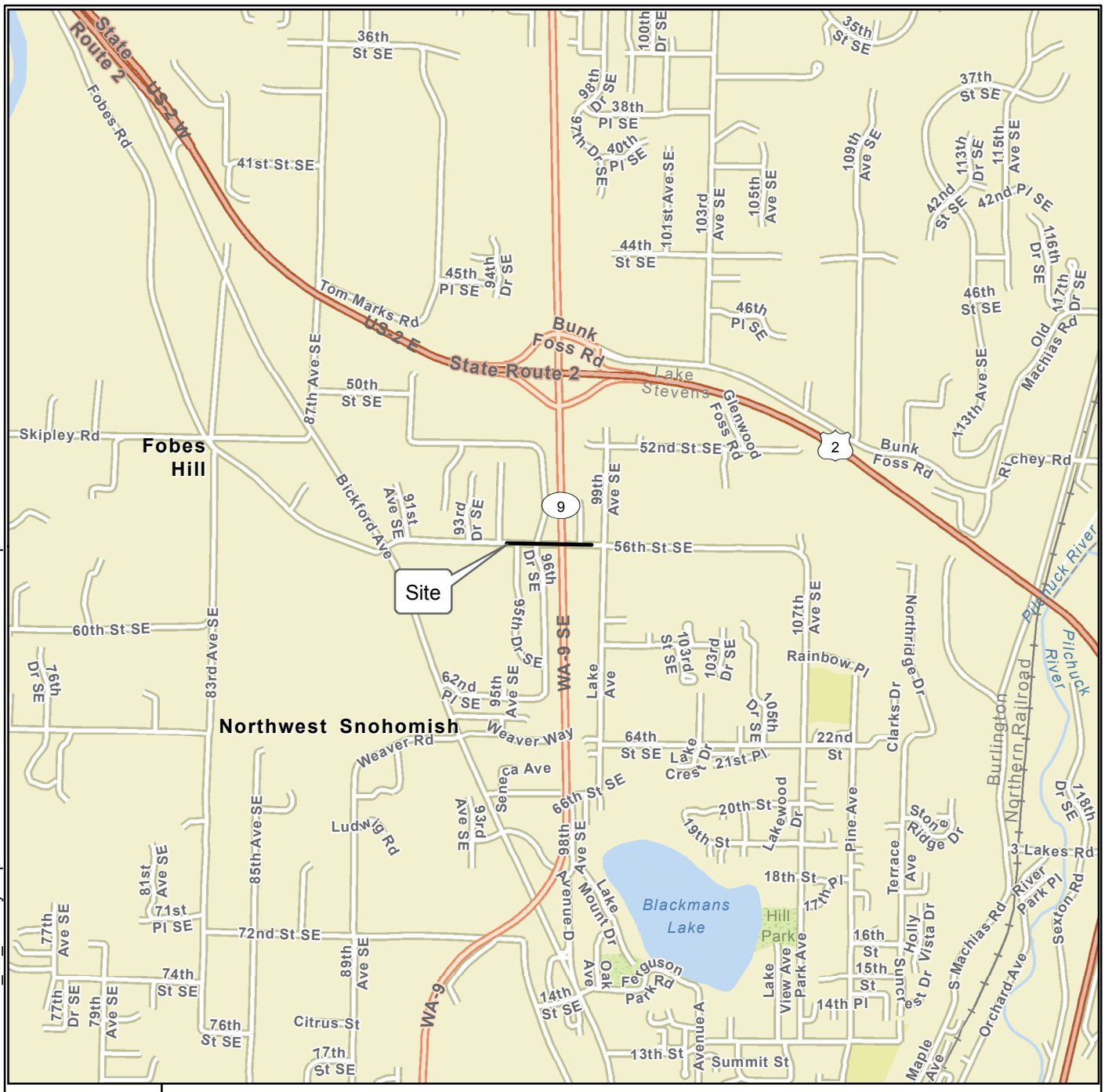

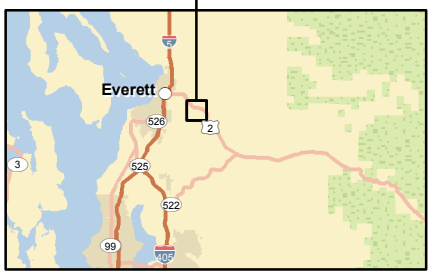

N
W E
S

2,000 0 2,000
Feet

Notes:
1. The locations of all features shown are approximate.
2. This drawing is for information purposes. It is intended to assist in showing features discussed in an attached document. GeoEngineers, Inc. cannot guarantee the accuracy and content of electronic files. The master file is stored by GeoEngineers, Inc. and will serve as the official record of this communication.
3. It is unlawful to copy or reproduce all or any part thereof, whether for personal use or resale, without permission.

Data Sources: ESRI Data & Maps, Street Maps 2005

Transverse Mercator, Zone 10 N North, North American Datum 1983
North arrow oriented to grid north

Vicinity Map

30th Street SE Widening Project
Snohomish, Washington

GEOENGINEERS

Figure 1

Office: Redmond Path: \\red\projects\0\0820009\GIS\082000900_F1_VicinityMap.mxd Map Revised: 10/10/2014 EL

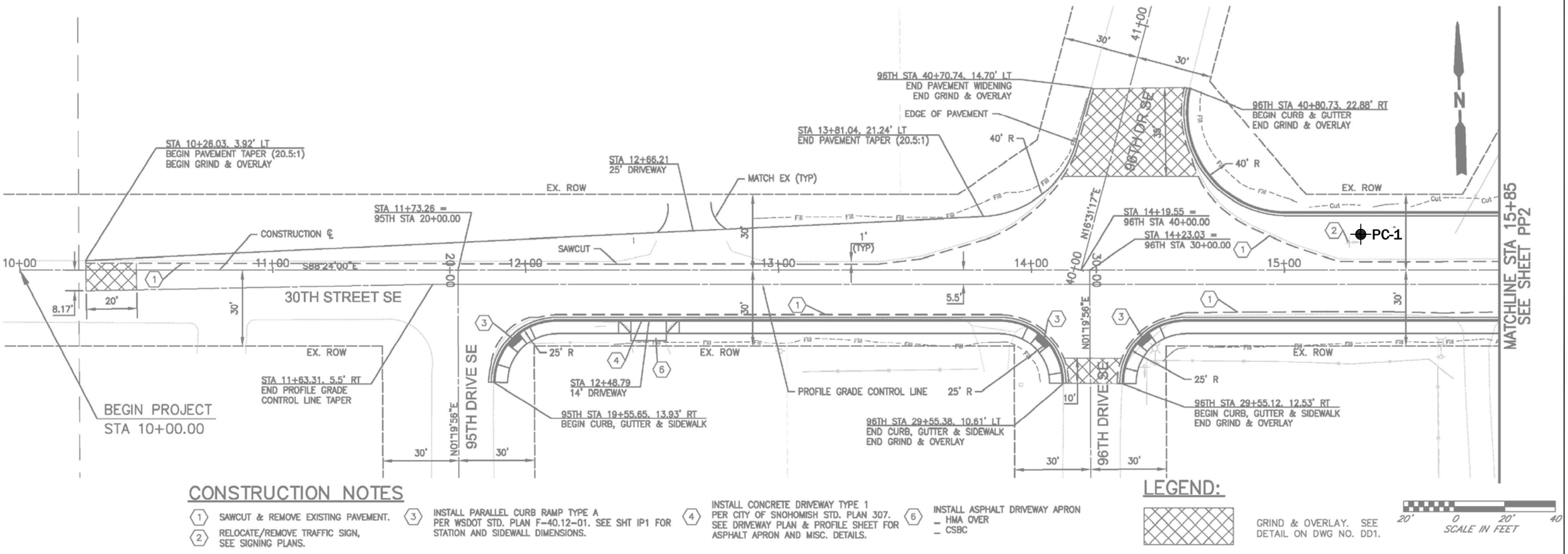

Notes:
1. The locations of all features shown are approximate.
2. This drawing is for information purposes. It is intended to assist in showing features discussed in an attached document. GeoEngineers, Inc. cannot guarantee the accuracy and content of electronic files. The master file is stored by GeoEngineers, Inc. and will serve as the official record of this communication.

Reference: PDF into raster image provided by AECOM.

Legend

PC-1 Pavement core location

N W E S

40 0 40
Feet

Site Plan
30th Street SE Widening Project Snohomish, Washington
GEOENGINEERS — Figure 2

W:\Redmond\Projects\0\0820009\00\CAD\082000900_F2_F3.dwg\TAB:F2 modified by SYI on Nov 14, 2014 - 10:19am

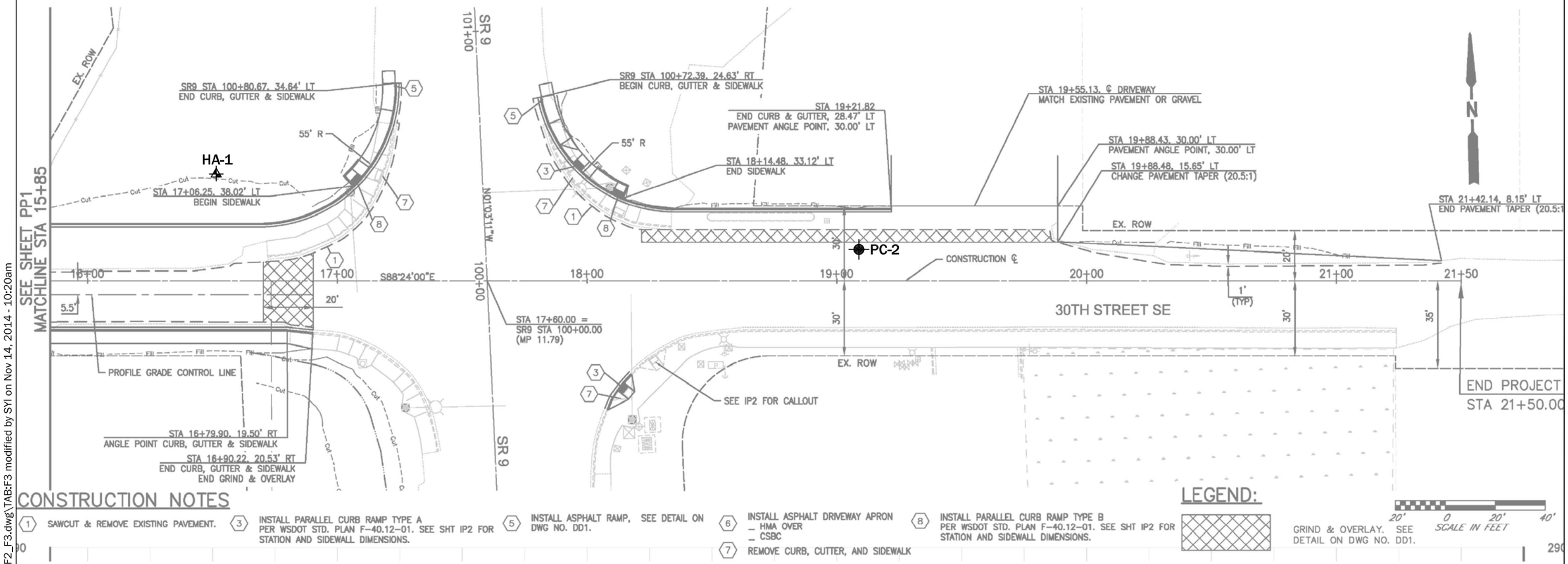

Notes:
1. The locations of all features shown are approximate.
2. This drawing is for information purposes. It is intended to assist in showing features discussed in an attached document. GeoEngineers, Inc. cannot guarantee the accuracy and content of electronic files. The master file is stored by GeoEngineers, Inc. and will serve as the official record of this communication.

Reference: PDF into raster image provided by AECOM.

Legend

PC-2 Pavement core location

HA-1 Hand auger location

N W E S

40 0 40
Feet

Site Plan

30th Street SE Widening Project
Snohomish, Washington

GeoEngineers

Figure 3

W:\Redmond\Projects\0\0820009\00\CAD\082000900_F2_F3.dwg\TAB:F3 modified by SYI on Nov 14, 2014 - 10:20am

APPENDICES

GeoEngineers

APPENDIX A
Field Explorations

APPENDIX A
FIELD EXPLORATIONS

Subsurface soil and groundwater conditions were evaluated along the project alignment by completing two pavement cores (PC-1 and PC-2) and one hand auger exploration (HA-1) at the approximate locations shown on the Site Plan, Figure 2. These explorations were completed on October 6, 2014 to depths of approximately 1½ feet each below the existing ground surface. The asphalt pavement coring was performed by Evergreen Concrete Cutting Inc. under subcontract to GeoEngineers.

Exploration locations were estimated by measuring distances from site features in the field using taping and should be considered approximate. Exploration locations and elevations should be considered accurate only to the degree implied by the methods used.

The explorations were continuously observed by members of our geotechnical engineering and geology staff who located the explorations, measured the thicknesses of the various pavement section materials, classified the soils encountered, obtained representative soil samples, and maintained a detailed log of each exploration. In addition, pertinent information including soil sample depths, stratigraphy, and groundwater seepage conditions were recorded.

The soils encountered in the explorations were visually classified using the soil classification system described in Figure A-1. Figures A-2 through A-4 present the logs of the pavement core and hand auger explorations. The logs reflect our interpretation of the field conditions and the results of laboratory evaluation and testing of samples. They also indicate the depths at which the soil types or their characteristics change, although the change might actually be gradual. If the change occurred between samples, it was interpreted.

The soil samples we obtained were logged, sealed in plastic bags and transported to our Redmond laboratory. Field classifications were further evaluated in our laboratory.

The exploration holes were subsequently backfilled in tamped lifts with the material excavated from these explorations. Pavement core holes were subsequently patched with quick setting concrete.

Observations of groundwater conditions were made during our field work. No groundwater was encountered during field activities. Groundwater conditions observed during drilling represent a short term condition and may or may not be representative of the long term groundwater conditions at the site.

SOIL CLASSIFICATION CHART

MAJOR DIVISIONS			SYMBOLS GRAPH	SYMBOLS LETTER	TYPICAL DESCRIPTIONS
COARSE GRAINED SOILS MORE THAN 50% RETAINED ON NO. 200 SIEVE	GRAVEL AND GRAVELLY SOILS MORE THAN 50% OF COARSE FRACTION RETAINED ON NO. 4 SIEVE	CLEAN GRAVELS (LITTLE OR NO FINES)		GW	WELL-GRADED GRAVELS, GRAVEL - SAND MIXTURES
				GP	POORLY-GRADED GRAVELS, GRAVEL - SAND MIXTURES
		GRAVELS WITH FINES (APPRECIABLE AMOUNT OF FINES)		GM	SILTY GRAVELS, GRAVEL - SAND - SILT MIXTURES
				GC	CLAYEY GRAVELS, GRAVEL - SAND - CLAY MIXTURES
	SAND AND SANDY SOILS MORE THAN 50% OF COARSE FRACTION PASSING NO. 4 SIEVE	CLEAN SANDS (LITTLE OR NO FINES)		SW	WELL-GRADED SANDS, GRAVELLY SANDS
				SP	POORLY-GRADED SANDS, GRAVELLY SAND
		SANDS WITH FINES (APPRECIABLE AMOUNT OF FINES)		SM	SILTY SANDS, SAND - SILT MIXTURES
				SC	CLAYEY SANDS, SAND - CLAY MIXTURES
FINE GRAINED SOILS MORE THAN 50% PASSING NO. 200 SIEVE	SILTS AND CLAYS	LIQUID LIMIT LESS THAN 50		ML	INORGANIC SILTS, ROCK FLOUR, CLAYEY SILTS WITH SLIGHT PLASTICITY
				CL	INORGANIC CLAYS OF LOW TO MEDIUM PLASTICITY, GRAVELLY CLAYS, SANDY CLAYS, SILTY CLAYS, LEAN CLAYS
				OL	ORGANIC SILTS AND ORGANIC SILTY CLAYS OF LOW PLASTICITY
	SILTS AND CLAYS	LIQUID LIMIT GREATER THAN 50		MH	INORGANIC SILTS, MICACEOUS OR DIATOMACEOUS SILTY SOILS
				CH	INORGANIC CLAYS OF HIGH PLASTICITY
				OH	ORGANIC CLAYS AND SILTS OF MEDIUM TO HIGH PLASTICITY
HIGHLY ORGANIC SOILS				PT	PEAT, HUMUS, SWAMP SOILS WITH HIGH ORGANIC CONTENTS

NOTE: Multiple symbols are used to indicate borderline or dual soil classifications

ADDITIONAL MATERIAL SYMBOLS

SYMBOLS GRAPH	SYMBOLS LETTER	TYPICAL DESCRIPTIONS
	AC	Asphalt Concrete
	CC	Cement Concrete
	CR	Crushed Rock/ Quarry Spalls
	TS	Topsoil/ Forest Duff/Sod

Groundwater Contact

Measured groundwater level in exploration, well, or piezometer

Measured free product in well or piezometer

Graphic Log Contact

Distinct contact between soil strata or geologic units

Approximate location of soil strata change within a geologic soil unit

Material Description Contact

Distinct contact between soil strata or geologic units

Approximate location of soil strata change within a geologic soil unit

Sampler Symbol Descriptions

2.4-inch I.D. split barrel

Standard Penetration Test (SPT)

Shelby tube

Piston

Direct-Push

Bulk or grab

Blowcount is recorded for driven samplers as the number of blows required to advance sampler 12 inches (or distance noted). See exploration log for hammer weight and drop.

A "P" indicates sampler pushed using the weight of the drill rig.

Laboratory / Field Tests

%F	Percent fines
AL	Atterberg limits
CA	Chemical analysis
CP	Laboratory compaction test
CS	Consolidation test
DS	Direct shear
HA	Hydrometer analysis
MC	Moisture content
MD	Moisture content and dry density
OC	Organic content
PM	Permeability or hydraulic conductivity
PI	Plasticity index
PP	Pocket penetrometer
PPM	Parts per million
SA	Sieve analysis
TX	Triaxial compression
UC	Unconfined compression
VS	Vane shear

Sheen Classification

NS	No Visible Sheen
SS	Slight Sheen
MS	Moderate Sheen
HS	Heavy Sheen
NT	Not Tested

NOTE: The reader must refer to the discussion in the report text and the logs of explorations for a proper understanding of subsurface conditions. Descriptions on the logs apply only at the specific exploration locations and at the time the explorations were made; they are not warranted to be representative of subsurface conditions at other locations or times.

KEY TO EXPLORATION LOGS

GEOENGINEERS

FIGURE A-1

Date Excavated: 10/6/2014

Equipment: Core Barrel and Hand Auger

Logged By: DTM

Total Depth (ft) 1.5

Elevation (feet)	Depth (feet)	SAMPLE: Testing Sample	SAMPLE: Sample Name / Testing	Graphic Log	Group Classification	Encountered Water	MATERIAL DESCRIPTION	Moisture Content, %	REMARKS
					AC		8-inch asphalt concrete pavement		8-inch-diameter pavement core
		X	1 MC		SP-SM		Brown fine to coarse sand with silt and gravel (very dense, moist)	3	6-inch-diameter hand auger
	1	X	2 SA		SM		Brown silty fine to medium sand with gravel (very dense, moist)	7	Probe = 0.5 inches SA (%F = 23)

Hand auger completed to 1½ feet below pavement surface
Probed subgrade with ½-inch-diameter steel probe rod
No groundwater seepage observed
No caving observed

Notes: See Figure A-1 for explanation of symbols.
The depths on the hand auger logs are based on an average of measurements across the hand auger and should be considered accurate to 0.5 foot.

Log of Pavement Core PC-1

GEOENGINEERS

Project: 30th Street SE Widening
Project Location: Snohomish, Washington
Project Number: 0820-009-00

Figure A-2
Sheet 1 of 1

Redmond: Date:12/22/14 Path:\\RED\PROJECTS\0\0820009\GINT\082000900.GPJ DBTemplate/LibTemplate:GEOENGINEERS8.GDT/GEI8_TESTPIT_1P_GEOTEC

Date Excavated: 10/6/2014

Equipment: Core Barrel and Hand Auger

Logged By: DTM

Total Depth (ft) 1.5

Elevation (feet)	Depth (feet)	SAMPLE: Testing Sample	SAMPLE: Sample Name / Testing	Graphic Log	Group Classification	Encountered Water	MATERIAL DESCRIPTION	Moisture Content, %	REMARKS
					AC		9 inches asphalt concrete pavement		8-inch-diameter pavement core
		X	1		GP-GM		Brown fine to coarse gravel with silt, sand and asphalt debris (medium dense, moist) (fill)		6-inch-diameter hand auger
	1	X	2 MC		GP-GM		Brown fine to coarse gravel with silt and sand (very dense, moist)	3	Probe 2½ inches Probe ½ inch

Hand auger completed to 1½ feet below pavement surface
Probed subgrade with ½-inch-diameter steel probe rod
No groundwater seepage observed
No caving observed

Notes: See Figure A-1 for explanation of symbols.
The depths on the hand auger logs are based on an average of measurements across the hand auger and should be considered accurate to 0.5 foot.

Log of Pavement Core PC-2

GEOENGINEERS

Project: 30th Street SE Widening
Project Location: Snohomish, Washington
Project Number: 0820-009-00

Figure A-3
Sheet 1 of 1

Redmond: Date:12/22/14 Path:\\RED\PROJECTS\0\0820009\GINT\082000900.GPJ DBTemplate/LibTemplate:GEOENGINEERS8.GDT/GEI8_TESTPIT_1P_GEOTEC

Date Excavated: 10/6/2014 | Logged By: DTM

Equipment: Hand Auger | Total Depth (ft) 1.5

Elevation (feet)	Depth (feet)	SAMPLE: Testing Sample	SAMPLE: Sample Name / Testing	Graphic Log	Group Classification	Encountered Water	MATERIAL DESCRIPTION	Moisture Content, %	REMARKS
			1		SP-SM		Brown fine to medium sand with silt and gravel; occasional fine roots (loose, moist)		
			2 SA				Becomes dense	5	Probe 4 inches SA (%F = 9)
	1		3						Probe 2 inches

Probed subrade with ½-inch-diameter steel probe rod
No groundwater seepage observed
No caving observed

Notes: See Figure A-1 for explanation of symbols.
The depths on the hand auger logs are based on an average of measurements across the hand auger and should be considered accurate to 0.5 foot.

Log of Hand Auger HA-1

GEOENGINEERS

Project: 30th Street SE Widening
Project Location: Snohomish, Washington
Project Number: 0820-009-00

Figure A-4
Sheet 1 of 1

Redmond: Date:12/22/14 Path:\\RED\PROJECTS\0\0820009\GINT\082000900.GPJ DBTemplate/LibTemplate:GEOENGINEERS8.GDT/GEI8_TESTPIT_1P_GEOTEC

APPENDIX B
Laboratory Testing

APPENDIX B
LABORATORY TESTING

General

Soil samples obtained from the borings and pavement core explorations were transported to our Redmond, Washington geotechnical laboratory and evaluated to confirm or modify field classifications, as well as to evaluate engineering and index properties of the soil samples. Representative samples were selected for laboratory testing consisting of moisture content, and grain size distribution (sieve analysis) tests. We performed the tests using test methods of the American Society for Testing and Materials (ASTM) or other applicable procedures.

Soil Classification

All soil samples obtained from the explorations were visually classified in the field and/or in our laboratory using a system based on the Unified Soil Classification System (USCS) and ASTM classification methods. ASTM Test Method D 2488 was used to visually classify the soil samples, while ASTM D 2487 was used to classify the soils based on laboratory test results. These classification procedures are incorporated in the exploration logs shown in Figures A-2 through A-4.

Moisture Content Testing

Moisture content tests were completed using ASTM D 2216 for representative samples obtained from the explorations. The results of these tests are presented on the exploration logs (Figures A-2 through A-4) at the depths at which the samples were obtained.

Sieve Analyses

Sieve analyses were completed on two samples using ASTM D 422 to determine the sample grain size distribution. The wet sieve analysis method was used to determine the percentage of soil particles retained on the U.S. No. 200 sieve. The results of the sieve analyses were plotted and classified using the USCS, and are presented in Figures B-1.

0820-009-00 SAS: SAS 10-17-2014

GEOENGINEERS

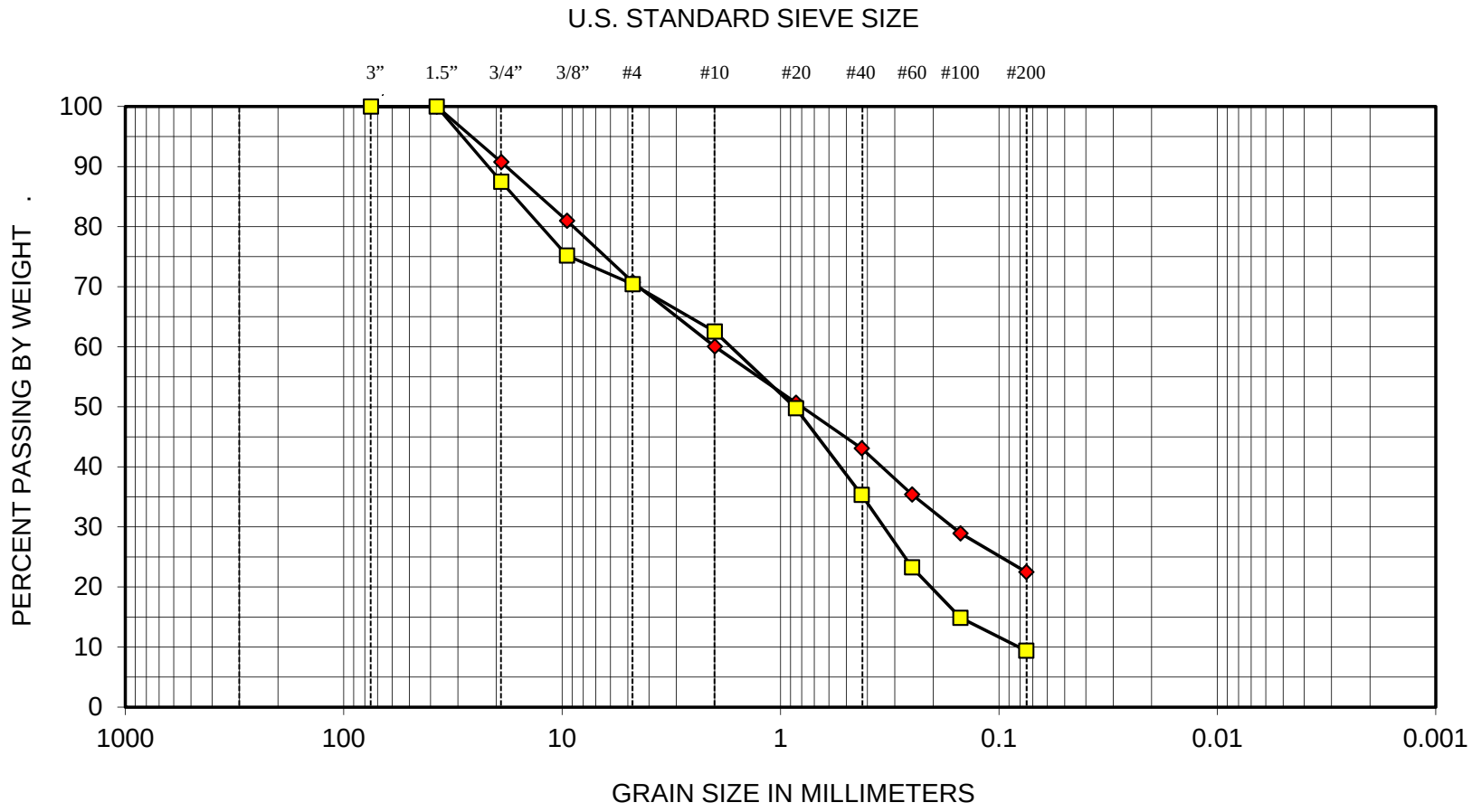

BOULDERS	COBBLES	GRAVEL		SAND			SILT OR CLAY
		COARSE	FINE	COARSE	MEDIUM	FINE	

SYMBOL	EXPLORATION NUMBER	DEPTH (ft)	SOIL CLASSIFICATION
◆	PC-1	1	Silty fine to medium sand with gravel (SM)
■	HA-1	½	Poorly graded fine to medium sand with silt and gravel (SP-SM)

SIEVE ANALYSIS RESULTS

FIGURE B-1

APPENDIX C
Supporting Pavement Design Calculations

AASHTO Flexible Pavement Design

Project Information

Project:	30th Street Widening	Job Number:	0820-009-00
Owner:	AECOM	Analysis by:	CW/BD
Date/Time:	11/14/2014 16:30	Checked by:	

Traffic/Soil Data

Analysis Description:	New Section	Percent Cars (%):	98
Average Daily Traffic in Design Lane (ADT):	5,008	Average Car Factor:	0.0015
Percent Growth (%):	2	Percent Trucks (%)	2
Design Life (years):	20	Average Truck Factor:	0.55
Number of Days in Design Year:	365	CBR of Subgrade Soil:	15
Growth Factor:	24	Mr, Resilient Modulus for Roadbed Soil (psi)[1]:	12217

[1] Ref: Pages I-13 throughI-15, II-19. Programmed for Mr=1500*CBR for CBR<6 and per relationship by Van Til (1972) for CBR>6.

Statistical Input

So, Overall Standard Deviation:	0.5	Ref: Page I-62
R, Reliability Level (%):	85	Ref: Page I-62
Zr, Standard Normal Deviate:	-1.0364	Ref: Page I-62
Po, Original Serviceability Index:	4.2	Ref: Page II-10
Pt, Terminal Serviceability Index:	2.5	Ref: Page II-10
ΔPSI, Change in Serviceability Index:	1.7	Ref: Page II-10

Design Pavement Section

Layer Number	Layer Type	Description	Thickness (inches)	[1]Drainage Coefficient, m_i	[2]AASHTO Structural Layer Coefficient, a_i	Layer Structural Number, SN_i
1A	Pavement	HMA CL. "B"	4	N/A	0.4	1.6
1B	Pavement					0
1C	Pavement					0
2A	Base	Base Course	6	0.9	0.12	0.648
2B	Base					0
2C	Base					0
3A	Subbase	Gravel Borrow	5	0.8	0.09	0.36
3B	Subbase					0
3C	Subbase					0

Total Structural Number for Design Pavement Section, SN: 2.608

[1] Reference pages II-22 through II-25

[2] Reference pages II-17 through II-22

Design Computation

Design Lane 18-kip Equivalent Single Axle Loads (ESALs):	553838	
Estimated Structural Number, SN_{est} (iterate to find design SN):	2.555	2.555
ESALs Computed from SN_{est}:	555165	553859
Design Structural Number, SN:	2.56	
Does Design Lane Pavement Section Have Adequate SN?:	Yes, Pavement Section OK	

AASHTO Flexible Pavement Design

Project Information

Project:	30th Street Widening	Job Number:	0820-009-00
Owner:	AECOM	Analysis by:	CE/BD
Date/Time:	11/14/2014 16:33	Checked by:	

Traffic/Soil Data

Analysis Description:	New Section	Percent Cars (%):	98
Average Daily Traffic in Design Lane (ADT):	5,008	Average Car Factor:	0.0015
Percent Growth (%):	2	Percent Trucks (%)	2
Design Life (years):	20	Average Truck Factor:	0.55
Number of Days in Design Year:	365	CBR of Subgrade Soil:	15
Growth Factor:	24	Mr, Resilient Modulus for Roadbed Soil (psi)[1]:	12217

[1] Ref: Pages I-13 throughI-15, II-19. Programmed for Mr=1500*CBR for CBR<6 and per relationship by Van Til (1972) for CBR>6.

Statistical Input

So, Overall Standard Deviation:	0.5	Ref: Page I-62
R, Reliability Level (%):	85	Ref: Page I-62
Zr, Standard Normal Deviate:	-1.0364	Ref: Page I-62
Po, Original Serviceability Index:	4.2	Ref: Page II-10
Pt, Terminal Serviceability Index:	2.5	Ref: Page II-10
ΔPSI, Change in Serviceability Index:	1.7	Ref: Page II-10

Design Pavement Section

Layer Number	Layer Type	Description	Thickness (inches)	[1]Drainage Coefficient, m_i	[2]AASHTO Structural Layer Coefficient, a_i	Layer Structural Number, SN_i
1A	Pavement	HMA CL. "B"	3	N/A	0.4	1.2
1B	Pavement	ATB	4	N/A	0.19	0.76
1C	Pavement					0
2A	Base	CSTC	6	0.9	0.12	0.648
2B	Base					0
2C	Base					0
3A	Subbase					0
3B	Subbase					0
3C	Subbase					0

Total Structural Number for Design Pavement Section, SN: 2.608

[1] Reference pages II-22 through II-25

[2] Reference pages II-17 through II-22

Design Computation

Design Lane 18-kip Equivalent Single Axle Loads (ESALs):	553838	
Estimated Structural Number, SN_{est} (iterate to find design SN):	2.555	2.555
ESALs Computed from SN_{est}:	555165	553859
Design Structural Number, SN:	2.56	
Does Design Lane Pavement Section Have Adequate SN?:	Yes, Pavement Section OK	

AASHTO Flexible Pavement Design

Project Information

Project:	30th Street Widening	Job Number:	
Owner:		Analysis by:	
Date/Time:	11/14/2014 16:36	Checked by:	

Traffic/Soil Data

Analysis Description:	New Section	Percent Cars (%):	98
Average Daily Traffic in Design Lane (ADT):	5,008	Average Car Factor:	0.0015
Percent Growth (%):	2	Percent Trucks (%)	2
Design Life (years):	20	Average Truck Factor:	0.55
Number of Days in Design Year:	365	CBR of Subgrade Soil:	15
Growth Factor:	24	Mr, Resilient Modulus for Roadbed Soil (psi)[1]:	12217

[1] Ref: Pages I-13 throughI-15, II-19. Programmed for Mr=1500*CBR for CBR<6 and per relationship by Van Til (1972) for CBR>6.

Statistical Input

So, Overall Standard Deviation:	0.5	Ref: Page I-62
R, Reliability Level (%):	85	Ref: Page I-62
Zr, Standard Normal Deviate:	-1.0364	Ref: Page I-62
Po, Original Serviceability Index:	4.2	Ref: Page II-10
Pt, Terminal Serviceability Index:	2.5	Ref: Page II-10
ΔPSI, Change in Serviceability Index:	1.7	Ref: Page II-10

Design Pavement Section

Layer Number	Layer Type	Description	Thickness (inches)	[1]Drainage Coefficient, m_i	[2]AASHTO Structural Layer Coefficient, a_i	Layer Structural Number, SN_i
1A	Pavement	HMA CL. "B"	4	N/A	0.4	1.6
1B	Pavement	Existing HMA	6	N/A	0.27	1.62
1C	Pavement					0
2A	Base					0
2B	Base					0
2C	Base					0
3A	Subbase					0
3B	Subbase					0
3C	Subbase					0

Total Structural Number for Design Pavement Section, SN: 3.22

[1] Reference pages II-22 through II-25

[2] Reference pages II-17 through II-22

Design Computation

Design Lane 18-kip Equivalent Single Axle Loads (ESALs):	553838	
Estimated Structural Number, SN_{est} (iterate to find design SN):	2.555	2.555
ESALs Computed from SN_{est}:	555165	553859
Design Structural Number, SN:	2.56	
Does Design Lane Pavement Section Have Adequate SN?:	Yes, Pavement Section OK	

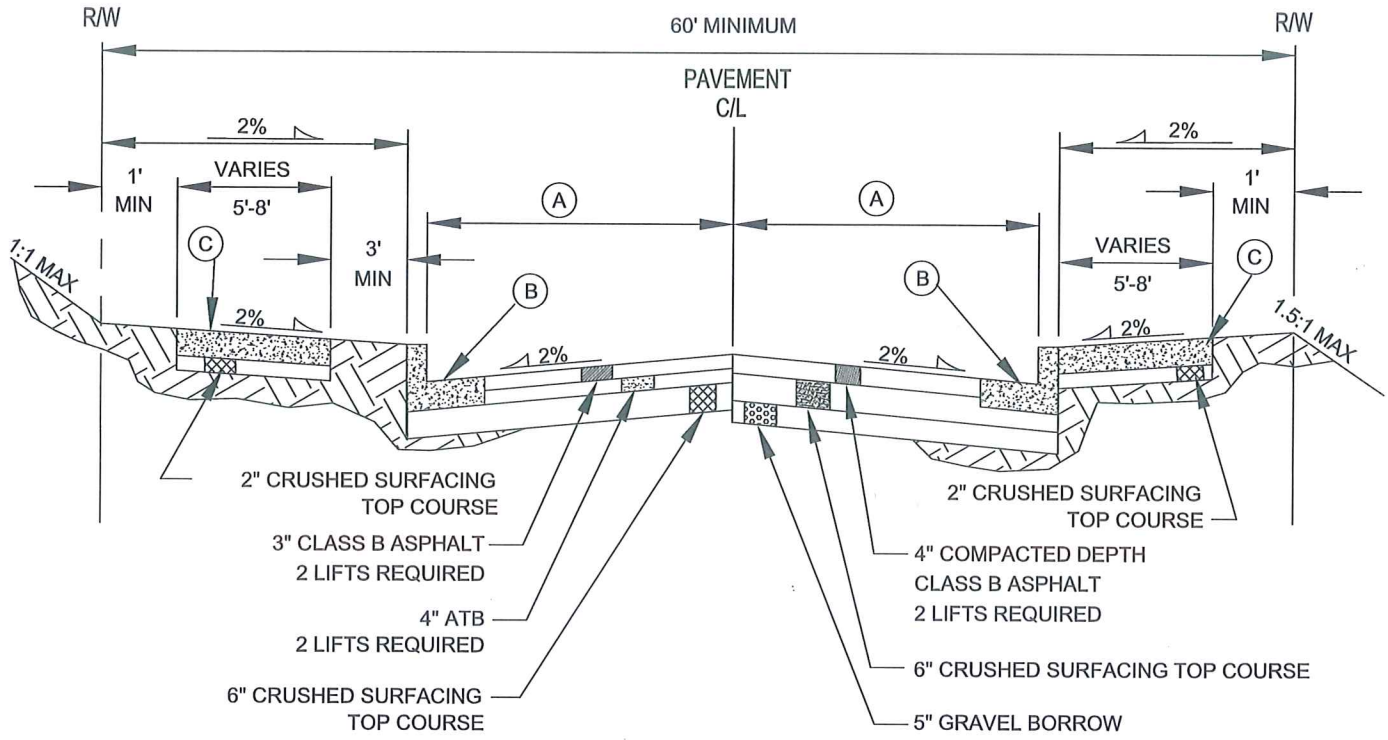

ALTERNATE ROADWAY SECTION

STANDARD ROADWAY SECTION

(A) PAVEMENT WIDTH

COLLECTOR ARTERIAL = 18'
MINOR ARTERIAL = 22'
PRINCIPAL ARTERIAL = 24+'

(B) CONCRETE CURB AND GUTTER TYPE A-1
SEE STD DWG 305A

(C) CEMENT CONCRETE SIDEWALK
SEE STD DWG 306

NOTES

IN WIDENING AREAS, THE EXISTING PAVEMENT EDGE SHALL BE SAW-CUT TO LEAVE A JOIN POINT. ANY TRAFFIC STRIPING REMOVED OR DAMAGED DURING WIDENING WORK SHALL BE REPLACED IN KIND OR AS DIRECTED BY THE CITY ENGINEER.

COMPACTION TESTS ON SUBGRADE AND TOP OF ROCK WILL BE REQUIRED. THE NUMBER OF TESTS SHALL BE AT THE DISCRETION OF THE CITY INSPECTOR. ALL TESTING SHALL BE THROUGH A LICENSED TESTING LABORATORY. THE MINIMUM COMPACTION SHALL BE 95% OF MAXIMUM DENSITY ON BOTH SUBGRADE AND TOP OF ROCK.

ADJUSTMENT OF CATCH BASIN LIDS OR GRATES, MONUMENTS CASES, VALVE BOXES, ETC SHALL BE THE RESPONSIBILITY OF THE CONTRACTOR OR DEVELOPER.

ROADWAY SECTION MAY BE ADJUSTED WITH THE APPROVAL OF THE CITY ENGINEER UPON SUBMISSION OF SUBSTANTIATING ENGINEERING DATA (CBR, ETC) TO SUPPORT THE ADJUSTMENT. FOR DESIGN PURPOSES, THE MINIMUM THICKNESS OF CLASS B ASPHALT SHALL BE 3" COMPACTED DEPTH. COMPACTION SHALL BE AN AVERAGE OF 91% OF RICE DENSITY.

SNOHOMISH WASHINGTON	TYPICAL ROADWAY SECTION ARTERIALS	Approved By: City Engineer Date: May 30, 2004	301 Number
	City of Snohomish Public Works Department		

APPENDIX D
Report Limitations and Guidelines for Use

APPENDIX D
REPORT LIMITATIONS AND GUIDELINES FOR USE[1]

This appendix provides information to help you manage your risks with respect to the use of this report.

Geotechnical Services are Performed for Specific Purposes, Persons and Projects

This report has been prepared for the exclusive use of the AECOM, City of Snohomish, and their authorized agents. This report is not intended for use by others, and the information contained herein is not applicable to other sites.

GeoEngineers structures our services to meet the specific needs of our clients. For example, a geotechnical or geologic study conducted for a civil engineer or architect may not fulfill the needs of a construction contractor or even another civil engineer or architect that are involved in the same project. Because each geotechnical or geologic study is unique, each geotechnical engineering or geologic report is unique, prepared solely for the specific client and project site. Our report is prepared for the exclusive use of our Client. No other party may rely on the product of our services unless we agree in advance to such reliance in writing. This is to provide our firm with reasonable protection against open-ended liability claims by third parties with whom there would otherwise be no contractual limits to their actions. Within the limitations of scope, schedule and budget, our services have been executed in accordance with our Agreement with the Client and generally accepted geotechnical practices in this area at the time this report was prepared. This report should not be applied for any purpose or project except the one originally contemplated.

A Geotechnical Engineering or Geologic Report is Based on a Unique Set of Project-Specific Factors

This report has been prepared for the proposed 30th Street SE Widening project located in Snohomish, Washington. GeoEngineers considered a number of unique, project-specific factors when establishing the scope of services for this project and report. Unless GeoEngineers specifically indicates otherwise, do not rely on this report if it was:

- not prepared for you,
- not prepared for your project,
- not prepared for the specific site explored, or
- completed before important project changes were made.

For example, changes that can affect the applicability of this report include those that affect:

- the function of the proposed structure;
- the elevation, configuration, location, orientation or weight of the proposed structure;
- composition of the design team; or
- project ownership.

---

[1] Developed based on material provided by ASFE, Professional Firms Practicing in the Geosciences; www.asfe.org.

If important changes are made after the date of this report, GeoEngineers should be given the opportunity to review our interpretations and recommendations and provide written modifications or confirmation, as appropriate.

Subsurface Conditions can Change

This geotechnical or geologic report is based on conditions that existed at the time the study was performed. The findings and conclusions of this report may be affected by the passage of time, by manmade events such as construction on or adjacent to the site, or by natural events such as floods, earthquakes, slope instability or groundwater fluctuations. Always contact GeoEngineers before applying a report to determine if it remains applicable.

Most Geotechnical and Geologic Findings are Professional Opinions

Our interpretations of subsurface conditions are based on field observations from widely spaced sampling locations at the site. Site exploration identifies subsurface conditions only at those points where subsurface tests are conducted or samples are taken. GeoEngineers reviewed field and laboratory data and then applied our professional judgment to render an opinion about subsurface conditions throughout the site. Actual subsurface conditions may differ, sometimes significantly, from those indicated in this report. Our report, conclusions and interpretations should not be construed as a warranty of the subsurface conditions.

Geotechnical Engineering Report Recommendations are not Final

Do not over-rely on the preliminary construction recommendations included in this report. These recommendations are not final, because they were developed principally from GeoEngineers' professional judgment and opinion. GeoEngineers' recommendations can be finalized only by observing actual subsurface conditions revealed during construction. GeoEngineers cannot assume responsibility or liability for this report's recommendations if we do not perform construction observation.

Sufficient monitoring, testing and consultation by GeoEngineers should be provided during construction to confirm that the conditions encountered are consistent with those indicated by the explorations, to provide recommendations for design changes should the conditions revealed during the work differ from those anticipated, and to evaluate whether or not earthwork activities are completed in accordance with our recommendations. Retaining GeoEngineers for construction observation for this project is the most effective method of managing the risks associated with unanticipated conditions.

A Geotechnical Engineering or Geologic Report Could Be Subject To Misinterpretation

Misinterpretation of this report by other design team members can result in costly problems. You could lower that risk by having GeoEngineers confer with appropriate members of the design team after submitting the report. Also retain GeoEngineers to review pertinent elements of the design team's plans and specifications. Contractors can also misinterpret a geotechnical engineering or geologic report. Reduce that risk by having GeoEngineers participate in pre-bid and preconstruction conferences, and by providing construction observation.

Do Not Redraw the Exploration Logs

Geotechnical engineers and geologists prepare final boring and test pit logs based upon their interpretation of field logs and laboratory data. To prevent errors or omissions, the logs included in a geotechnical

engineering or geologic report should never be redrawn for inclusion in architectural or other design drawings. Only photographic or electronic reproduction is acceptable, but recognize that separating logs from the report can elevate risk.

Give Contractors a Complete Report and Guidance

Some owners and design professionals believe they can make contractors liable for unanticipated subsurface conditions by limiting what they provide for bid preparation. To help prevent costly problems, give contractors the complete geotechnical engineering or geologic report, but preface it with a clearly written letter of transmittal. In that letter, advise contractors that the report was not prepared for purposes of bid development and that the report's accuracy is limited; encourage them to confer with GeoEngineers and/or to conduct additional study to obtain the specific types of information they need or prefer. A pre-bid conference can also be valuable. Be sure contractors have sufficient time to perform additional study. Only then might an owner be in a position to give contractors the best information available, while requiring them to at least share the financial responsibilities stemming from unanticipated conditions. Further, a contingency for unanticipated conditions should be included in your project budget and schedule.

Contractors are Responsible for Site Safety on Their Own Construction Projects

Our geotechnical recommendations are not intended to direct the contractor's procedures, methods, schedule or management of the work site. The contractor is solely responsible for job site safety and for managing construction operations to minimize risks to on-site personnel and to adjacent properties.

Read These Provisions Closely

Some clients, design professionals and contractors may not recognize that the geoscience practices (geotechnical engineering or geology) are far less exact than other engineering and natural science disciplines. This lack of understanding can create unrealistic expectations that could lead to disappointments, claims and disputes. GeoEngineers includes these explanatory "limitations" provisions in our reports to help reduce such risks. Please confer with GeoEngineers if you are unclear how these "Report Limitations and Guidelines for Use" apply to your project or site.

Geotechnical, Geologic and Environmental Reports Should Not Be Interchanged

The equipment, techniques and personnel used to perform an environmental study differ significantly from those used to perform a geotechnical or geologic study and vice versa. For that reason, a geotechnical engineering or geologic report does not usually relate any environmental findings, conclusions or recommendations; e.g., about the likelihood of encountering underground storage tanks or regulated contaminants. Similarly, environmental reports are not used to address geotechnical or geologic concerns regarding a specific project.

Biological Pollutants

GeoEngineers' Scope of Services specifically excludes the investigation, detection, prevention, or assessment of the presence of Biological Pollutants in or around any structure. Accordingly, this report includes no interpretations, recommendations, findings, or conclusions for the purpose of detecting, preventing, assessing, or abating Biological Pollutants. The term "Biological Pollutants" includes, but is not limited to, molds, fungi, spores, bacteria, and viruses, and/or any of their byproducts.

Have we delivered World Class Client Service?

Please let us know by visiting **www.geoengineers.com/feedback**.

GeoEngineers